# The Quiet Tradition Continues...

## With an advanced line of sealed combustion power direct vented water heaters.

The Power Direct Vent™ (PDV) is designed with a sealed combustion chamber, ultra-quiet blower and state-of-the-art gas control for highly accurate and reliable temperature control.

Perfect for both residential new home construction and replacement water heater applications, the Power Direct Vent™ will provide the ultimate solution for your hot water needs.

ENERGY STAR
HIGH EFFICIENCY
HAUTE EFFICACITÉ

## HIGH QUALITY FEATURES

### Energy Savings
- Exceeds energy efficiency standards
- No heated indoor air used for combustion

### High Quality Features
- 40/40 and 50/40 units meet 2009 ENERGY STAR® requirements
- Exclusive patented TankSaver® design to prolong tank life
- Low-profile design is ideal for replacement applications
- Conveniently located T&P and drain valve for serviceability

### Industry Leading, Ultra-Quiet Blower
- Continues the GSW tradition of quiet power vent water heaters

### Sealed Combustion Chamber Design
- Prevents accidental ignition of flammable vapours
- Enhances air quality as no indoor air is required for combustion
- Great for tight space installations

### Flexible Venting Configurations
- Can be vented with PVC or CPVC up to 60 equivalent feet for the 50/65 and 50 equivalent feet for the 40/40 and 50/40, horizontally through the wall or vertically through the roof (see installation manual for full details)
- Auto-reset temperature switch monitors vent temperature

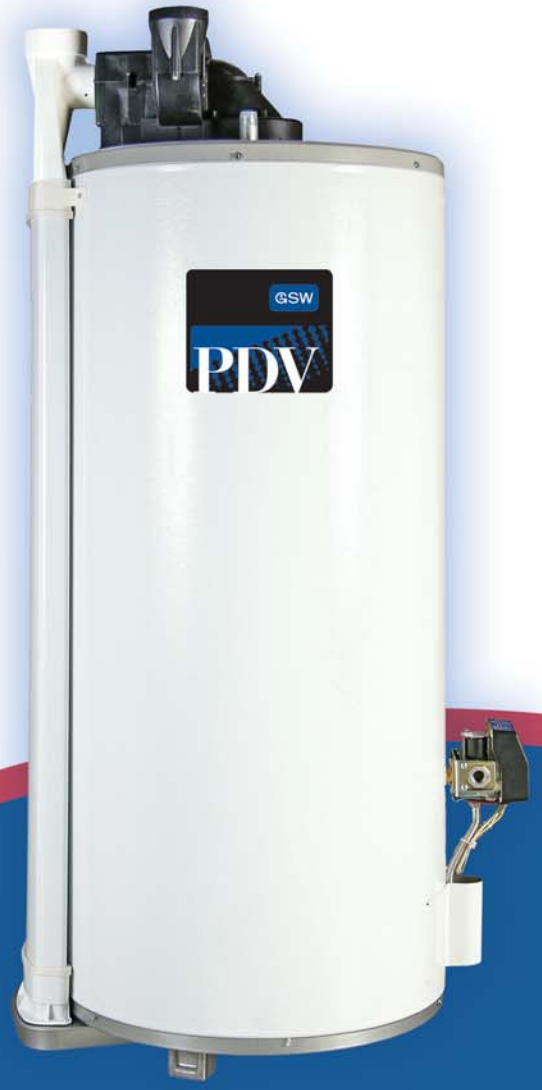

# An advanced line of sealed combustion power direct vented water heaters.

## CAPACITY & DIMENSIONS

| Model | Capacity USG (Litres) | BTU Input | Recovery @ 100°F/55°C Rise USG (Litres) | Energy Factor | Height to Top of Blower A in. (cm) | Height to Top of Tank B in. (cm) | Diameter C in. (cm) | Overall Depth D in. (cm) | Vent Diameter in. (cm) | Approximate Shipping Weight lb. (kg) |
|---|---|---|---|---|---|---|---|---|---|---|
| **NATURAL GAS** | | | | | | | | | | |
| 6G4040SN-PDV-ES | 40 (151) | 40,000 | 33.93 (128.44) | 0.67 | 59.5 (151.1) | 51 (130) | 22.6 (57) | 25.38 (64.46) | 2 (5.1) | 162 (73) |
| 6G5040SN-PDV-ES | 50 (189) | 40,000 | 33.93 (128.44) | 0.67 | 68.5 (174.0) | 60 (152) | 22.6 (57) | 25.38 (64.46) | 2 (5.1) | 182 (82) |
| 6G5065SN-PDV-02 | 50 (189) | 65,000 | 60 (227) | 0.60 | 61.7 (157) | 52 (132) | 22.6 (57) | 31 (79) | 3 (7.6) | 190 (86) |
| 6G5065SN-PDV-04 | 50 (189) | 58,500 | 54 (204) | 0.60 | 61.7 (157) | 52 (132) | 22.6 (57) | 31 (79) | 3 (7.6) | 190 (86) |
| **PROPANE** | | | | | | | | | | |
| G4040SP-PDV-ES* | 40 (151) | 40,000 | 33.93 (128.44) | 0.67 | 59.5 (151.1) | 51 (130) | 22.25 (56.56) | 25.38 (64.46) | 2 (5.1) | 162 (73) |
| G5040SP-PDV-ES* | 50 (189) | 40,000 | 33.93 (128.44) | 0.67 | 68.5 (174.0) | 60 (152) | 22.25 (56.56) | 25.38 (64.46) | 2 (5.1) | 182 (82) |

High altitude models are de-rated by 10% as per CSA.

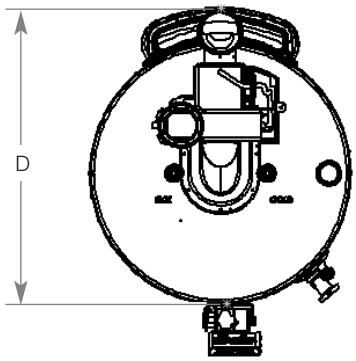


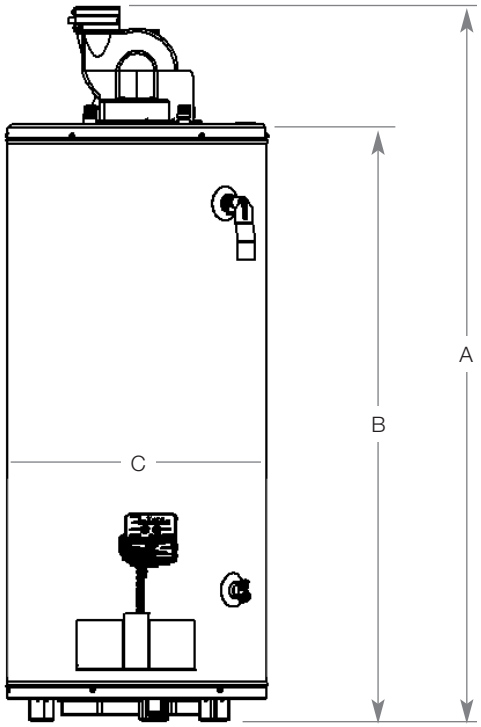


GSW

**Contact GSW Water Heating**
**www.gsw-wh.com**

©2008 GSW Water Heating. A division of A.O. Smith Enterprises.

Printed in Canada 02-09 GPD135N